CROFT



Product Code: 1824

Product Name: Sussex Cup Pull

Description: Our Sussex Cup Pull features a timeless brass design with a smooth half-moon form. Ideal for kitchen drawers and cabinetry, it brings understated grace to any interior.

Now available in 2 weeks in selected finishes.

Shown here in our Aged Brass finish.

Product Information

2 x M4 50mm breakoff screws, 64mm fixing centers

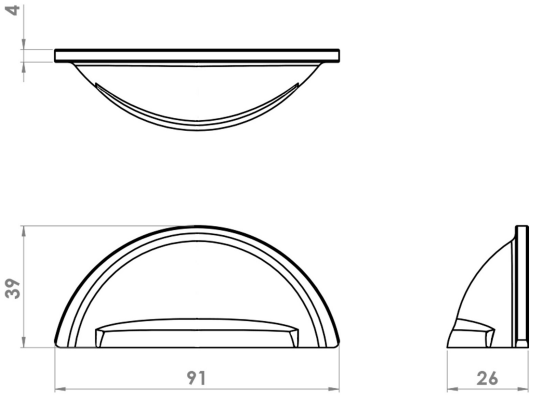

Available in all Croft finishes excluding AN, AUT, DAB, DAN, DBMA, DORB, IBMA, IBUL, LAB, MBK, ORB, PRL, PB, CP, RBMA, SB, SBUL, SC, SN, SMK, TB, ZB, DEB, EB, CN, DCN,