CROFT



Product Code: 7002

Product Name: Art Deco Lever Latch Furniture

Description: Inspired by the popular international design movement of the 1920s and 1930s, our popular lever latch furniture is part of our striking and dramatic Art Deco collection.

Shown here in our Aged Brass finish.

Product Information

98mm x 41mm

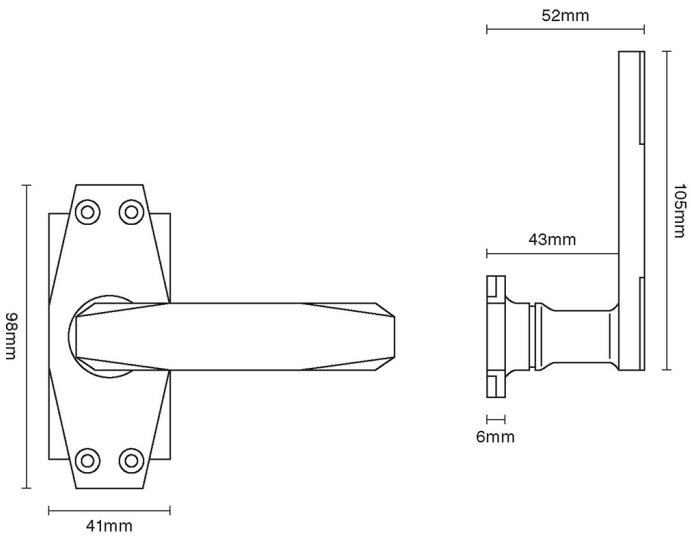

Available in all Croft finishes excluding DORB, IBMA, IBUL, MBK, ORB, RBMA, TB,