CROFT



Product Code: 2833

Product Name: Sash Stop Strike plate

Description:

Shown here in our Polished Brass Unlacquered finish.

Product Information

32 x 27mm

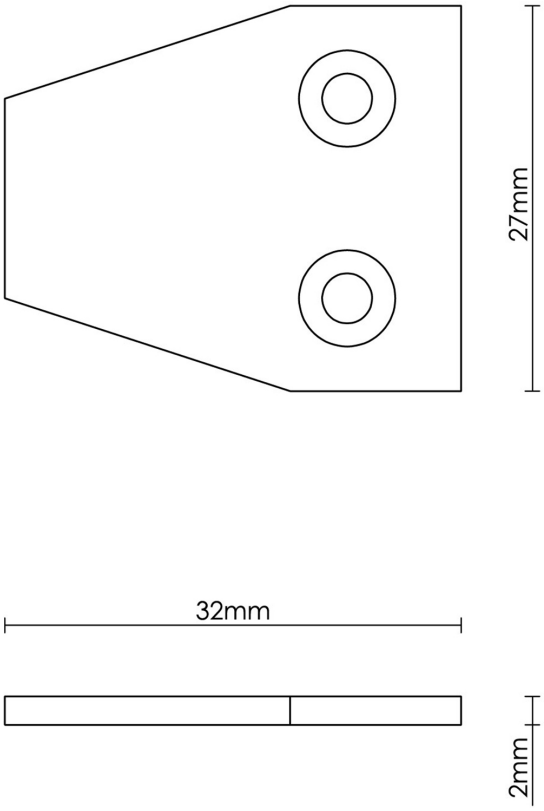

Available in all Croft finishes excluding DORB, IBMA, IBUL, MBK, ORB, RBMA, TB,