CROFT



Product Code: 1882

Product Name: Sash Eye

Description: Complete your look. Classic, elegant and part of our full range of sash window fittings.

Shown here in our Satin Nickel finish.

Product Information

48mm width

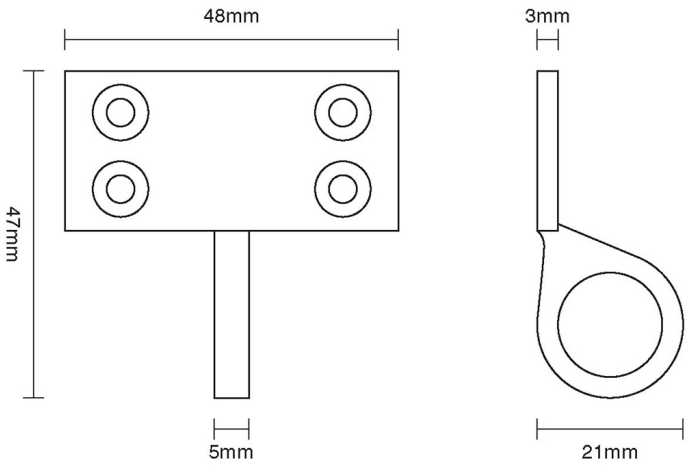

Available in all Croft finishes excluding DORB, IBMA, IBUL, MBK, ORB, RBMA, TB,