CROFT



Product Code: 1752

Product Name: Zeppelin Knob

Description:

Shown here in our Polished Brass Unlacquered finish.

Product Information

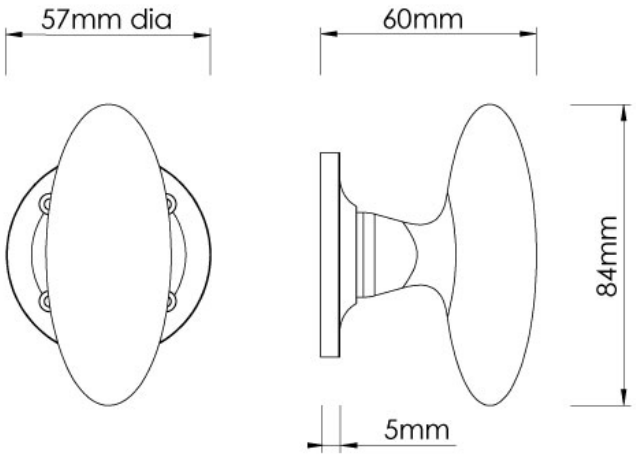

Available in all Croft finishes excluding DORB, IBMA, IBUL, MBK, ORB, RBMA, TB,