CROFT



Product Code: 7020

Product Name: Grace Door Handle on Small Rose

Description: Impeccably crafted the Grace lever is a beautiful addition to any door.

Also available on a selection of roses and backplates.

Shown here in our Satin Brass finish.

Product Information

44mm diameter rose.

Unsprung, inner rose is fixed with woodscrews supplied.

Grace and Impulse levers on our 65mm sprung covered roses are suitable for use with salto locking systems and have been tested. Please specify when ordering.

Please note sprung rose is 4mm thicker than unsprung rose.

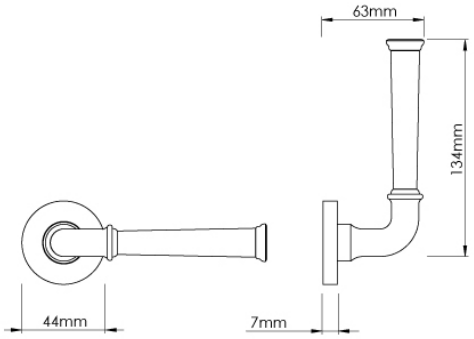

Available in all Croft finishes excluding DORB, IBMA, IBUL, MBK, ORB, RBMA, TB,