CROFT



Product Code: 7021

Product Name: Impulse Door Handle on Small Rose

Description: Traditional in design, the Impulse lever is the perfect balance of beauty and strength. A bold lever, the Impulse will effortlessly complete any traditional property.

Also available on a selection of roses and backplates.

Shown here in our Midnight Carbon finish.

Product Information

44mm diameter rose.

Unsprung, inner rose is fixed with woodscrews supplied.

Impulse and Grace levers on our 65mm sprung covered roses are suitable for use with salto locking systems and have been tested. Please specify when ordering.

Please note sprung rose is 4mm thicker than unsprung rose.

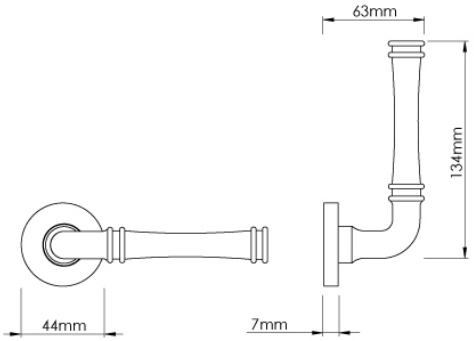

Available in all Croft finishes excluding DORB, IBMA, IBUL, MBK, ORB, RBMA, TB,